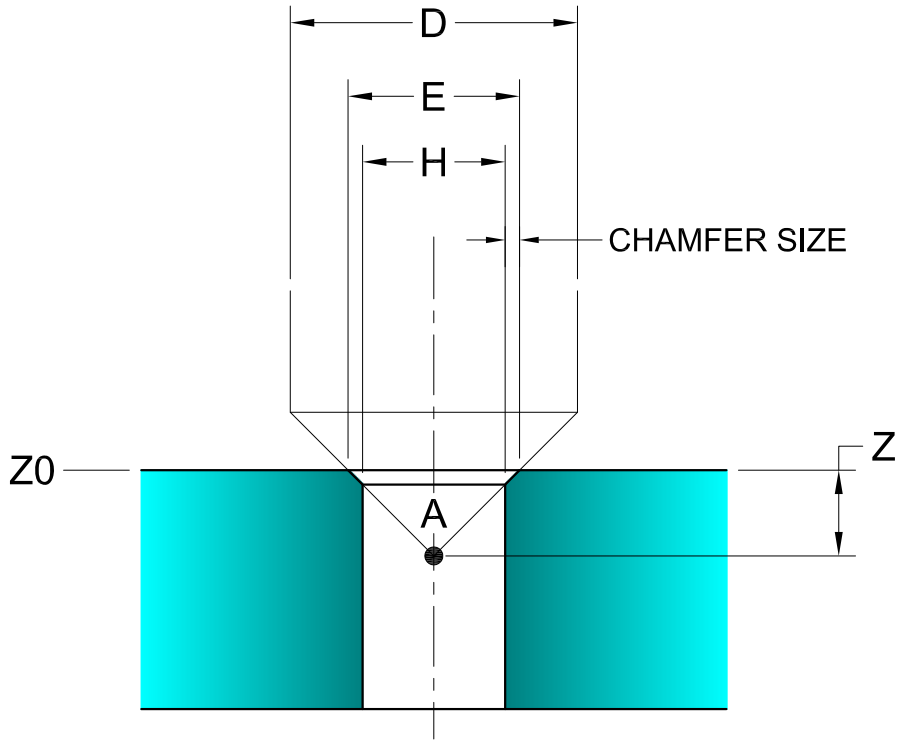

D > E

A = 90°

D = SPOT DRILL DIAMETER
H = HOLE DIAMETER
E = H + 2 x Chamfer size = H / 2 + Chamfer size
Z = PROGRAMMED DEPTH

$$Z = E / 2$$
$$Z = 0.5 \times E$$

E = EFFECTIVE CHAMFER DIAMETER

Peter Smid	CNC Reference	Spot drill depth calculation Using a spot drill with chamfering	SPOT DRILL - WITH CHAMFER