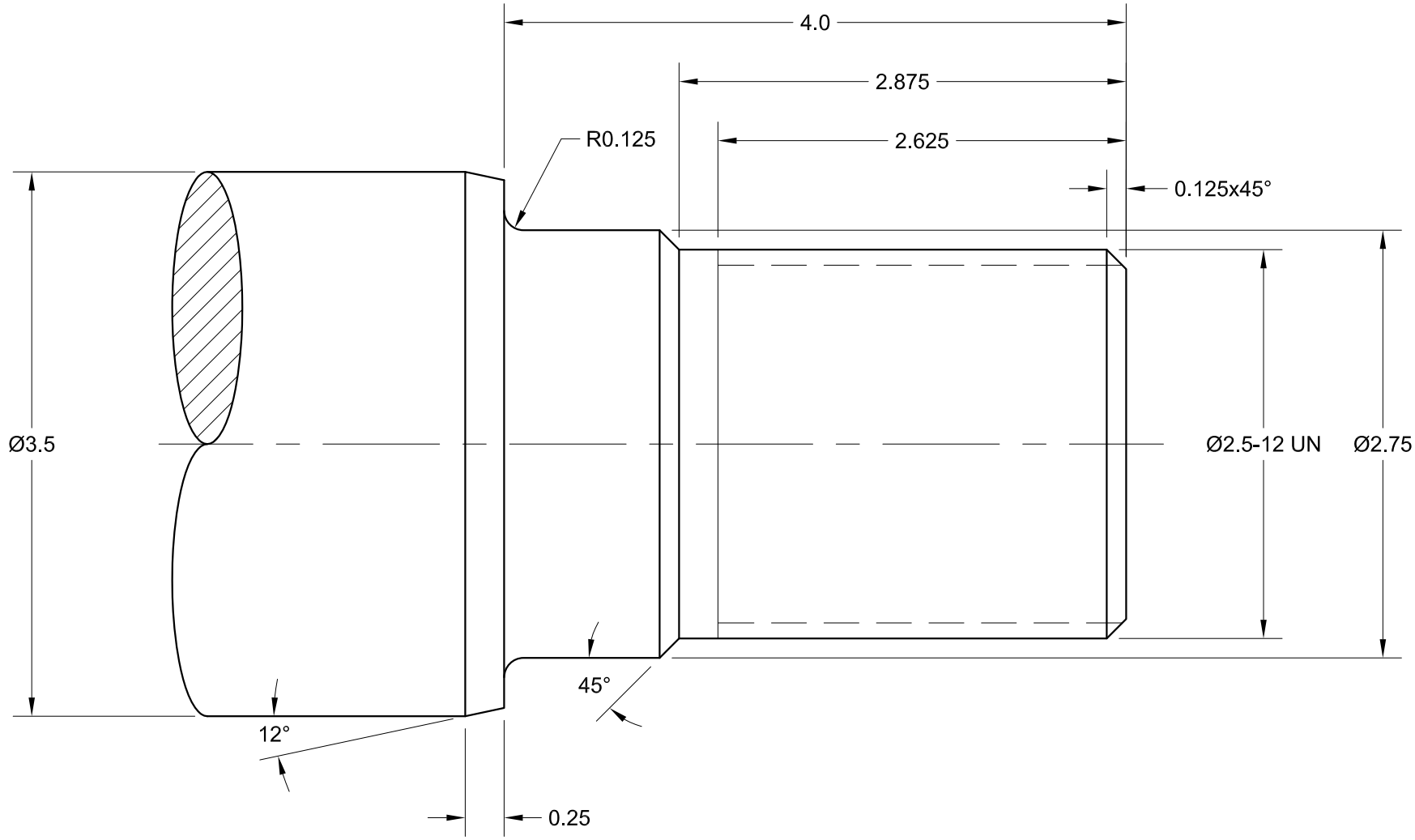

PROJECT:

ROUGH, FINISH AND THREAD THE SHAFT END

Peter Smid	CAD/CAM Lathe	Single point threading exercise Thread ending in a solid material	1 : 1 THREADING EXERCISE 2