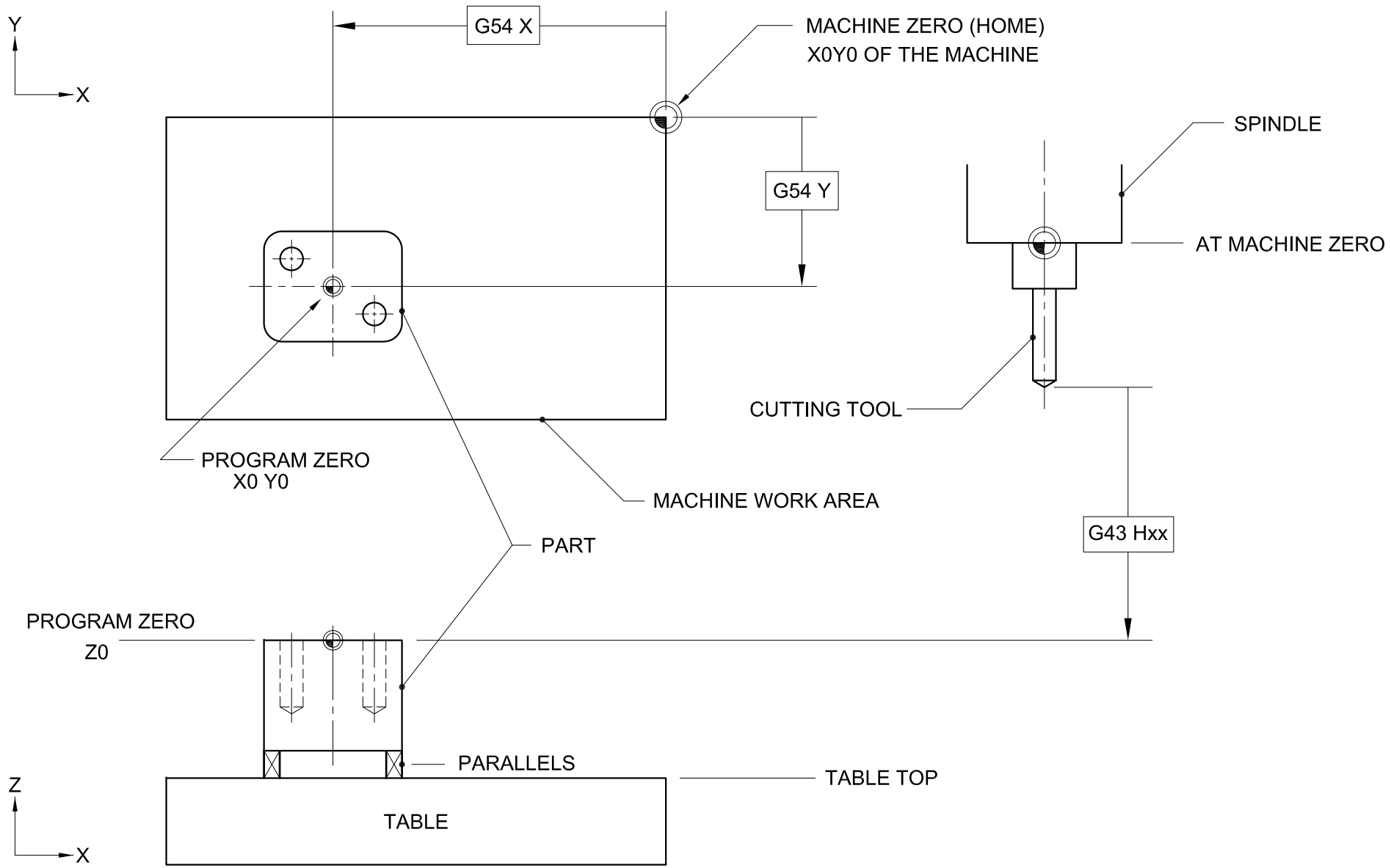

Peter Smid	CAD/CAM 2D	Face mill - Rough and Finish contour - Spot drill - Drill - Tap Offsets exercise: Work offset - Tool length offset - Cutter radius offset	PUNCH INSERT - SETUP