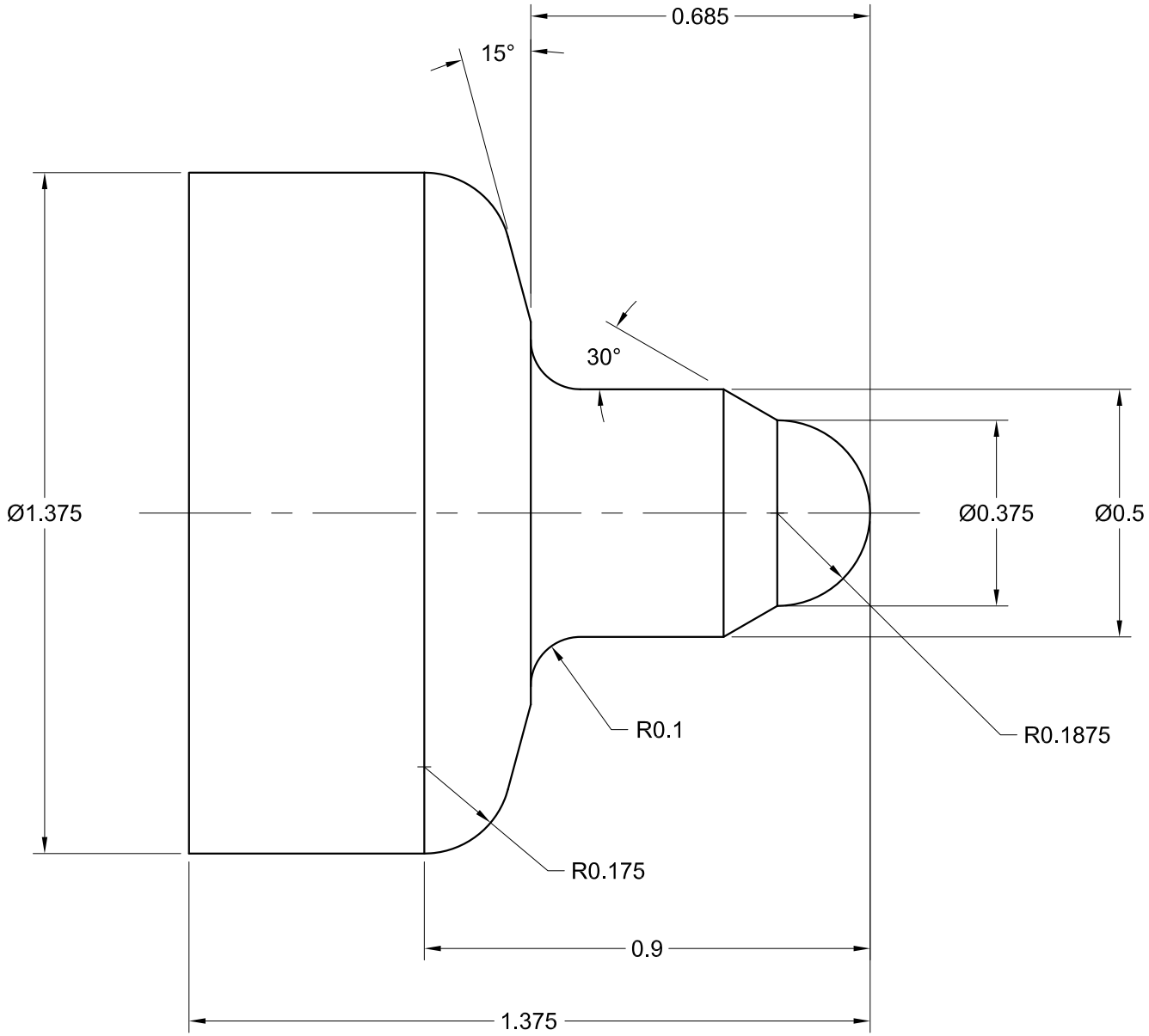

MATERIAL: Ø1.5 ALUMINUM BAR

Peter Smid	CAD/CAM Lathe	CNC lathe programming and machining exercise	3 : 1 PLUG