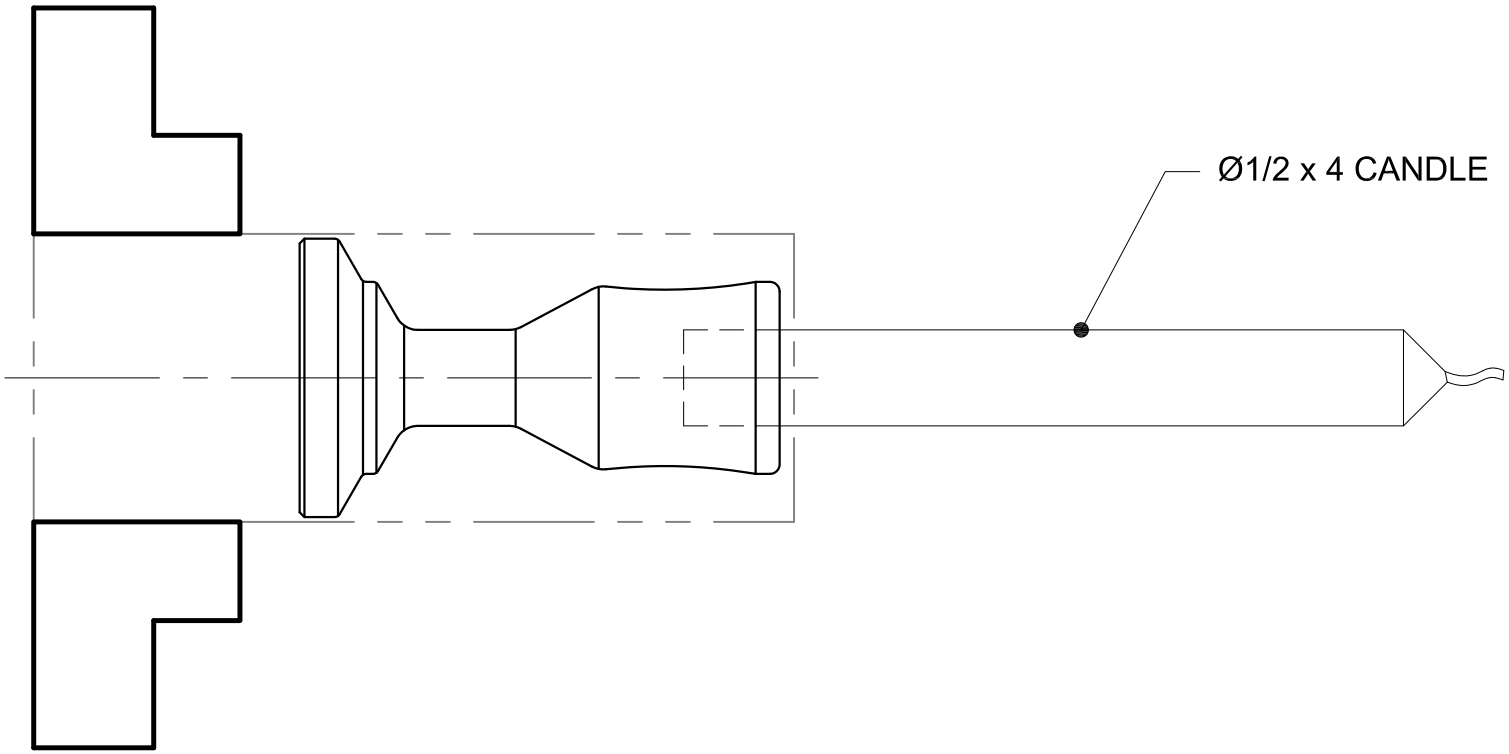

Peter Smid	CAD/CAM Lathe	This is an undimensioned drawing Use the enclosed file CANDLE HOLDER 3.DXF to import into CAM software	1 : 1 CANDLE HOLDER 3