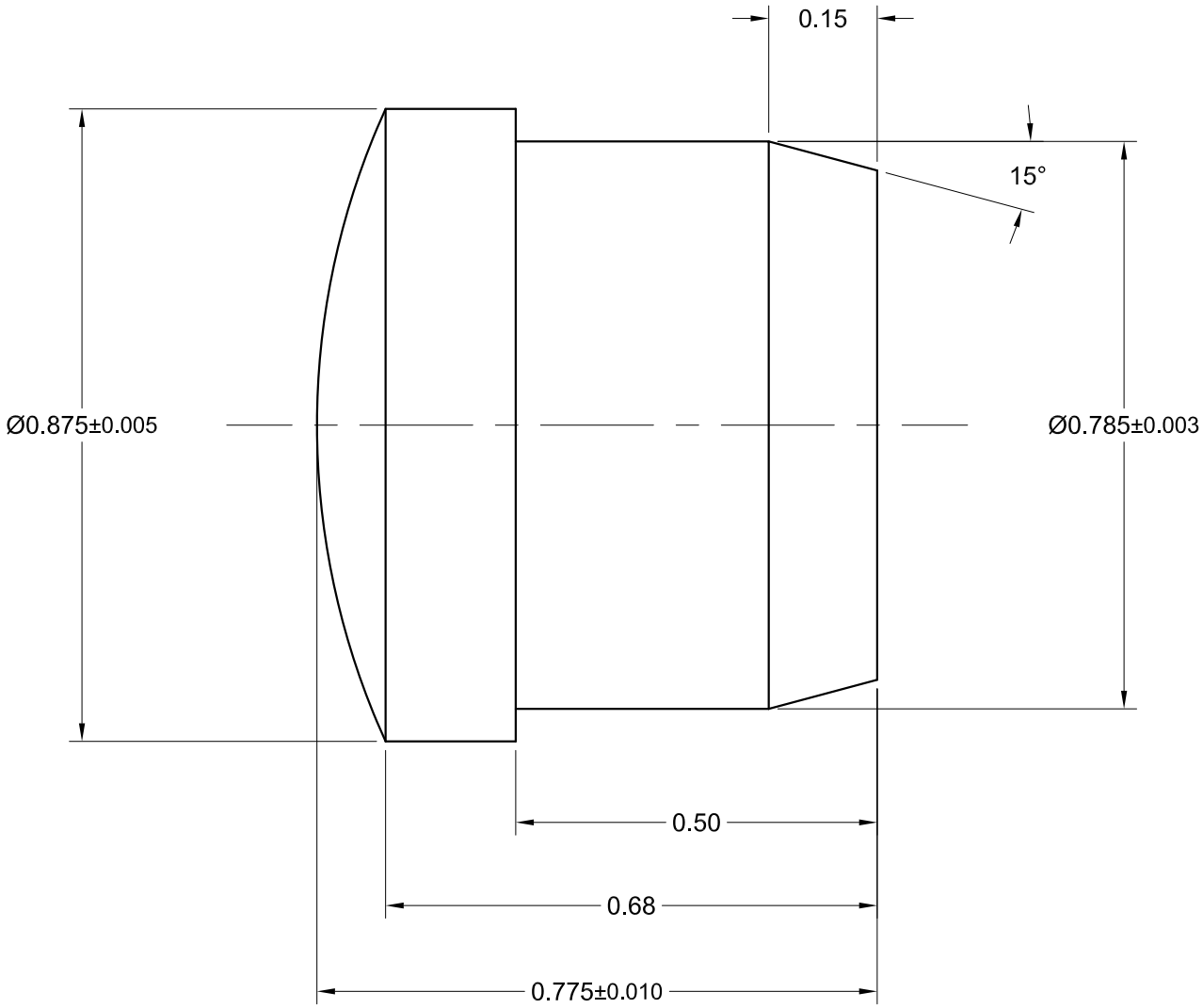


| | | | |
|---|---|---|---|
| Peter Smid | CAD/CAM<br>Lathe | CNC lathe - programming and machining exercise | 4 : 1<br>NYLON PLUG |