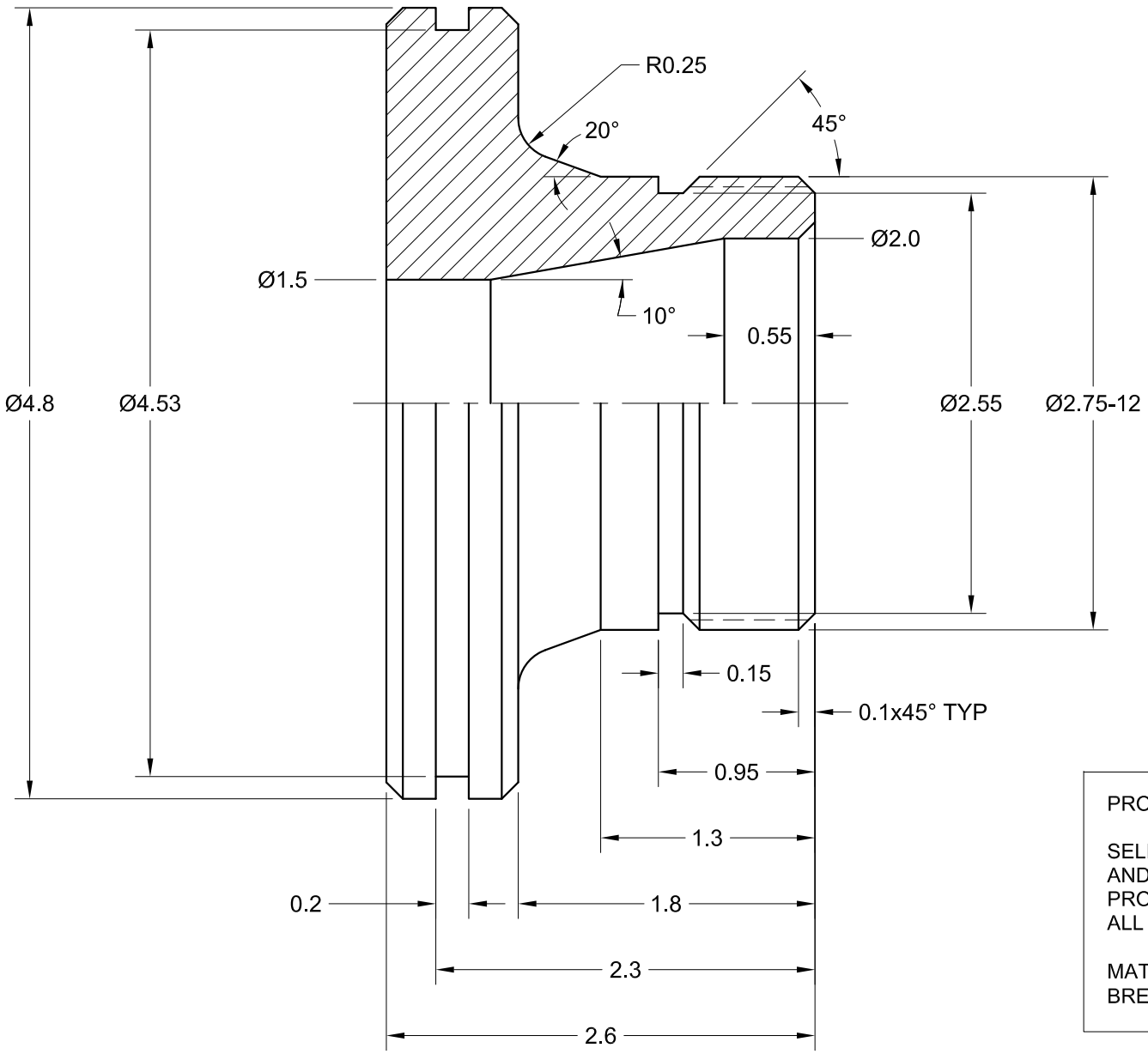

PROJECT:

SELECT TOOLS FROM A CATALOGUE, AND DEVELOP A COMPLETE PART PROGRAM FOR THIS PART. IDENTIFY ALL TOOLS IN THE PROGRAM.

MATERIAL: 1020 STEEL Ø5.0x2.75
BREAK SHARP CORNERS 0.02x45°

Peter Smid	CAD/CAM Lathe	CNC lathe programming Complete program development	1 : 1 LATHE OPERATIONS 1