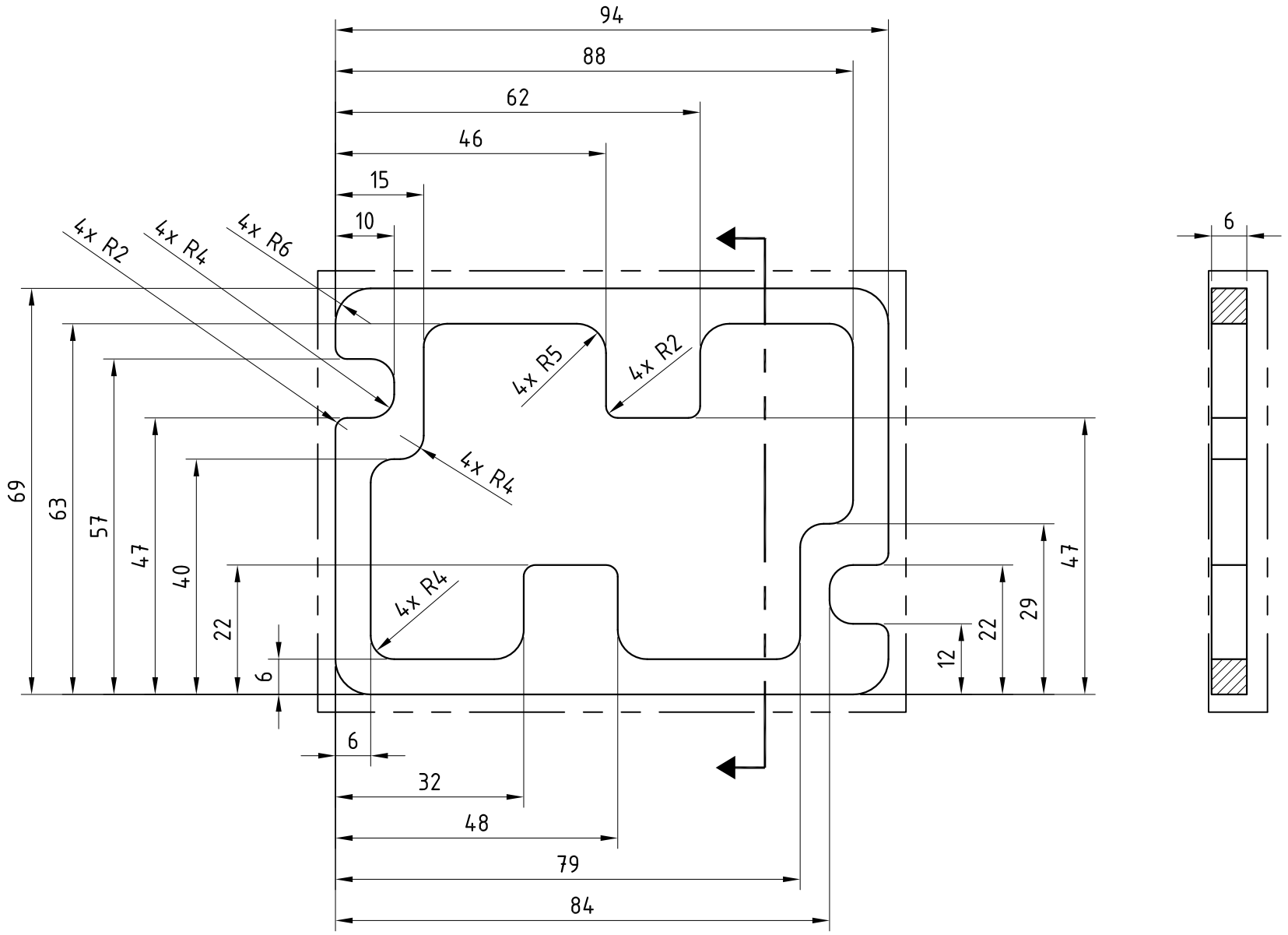

Peter Smid	CAD/CAM 2D	Part reversal - programming and machining exercise MATERIAL: AL - 100 x 75 x 12	1 : 1 SPACER