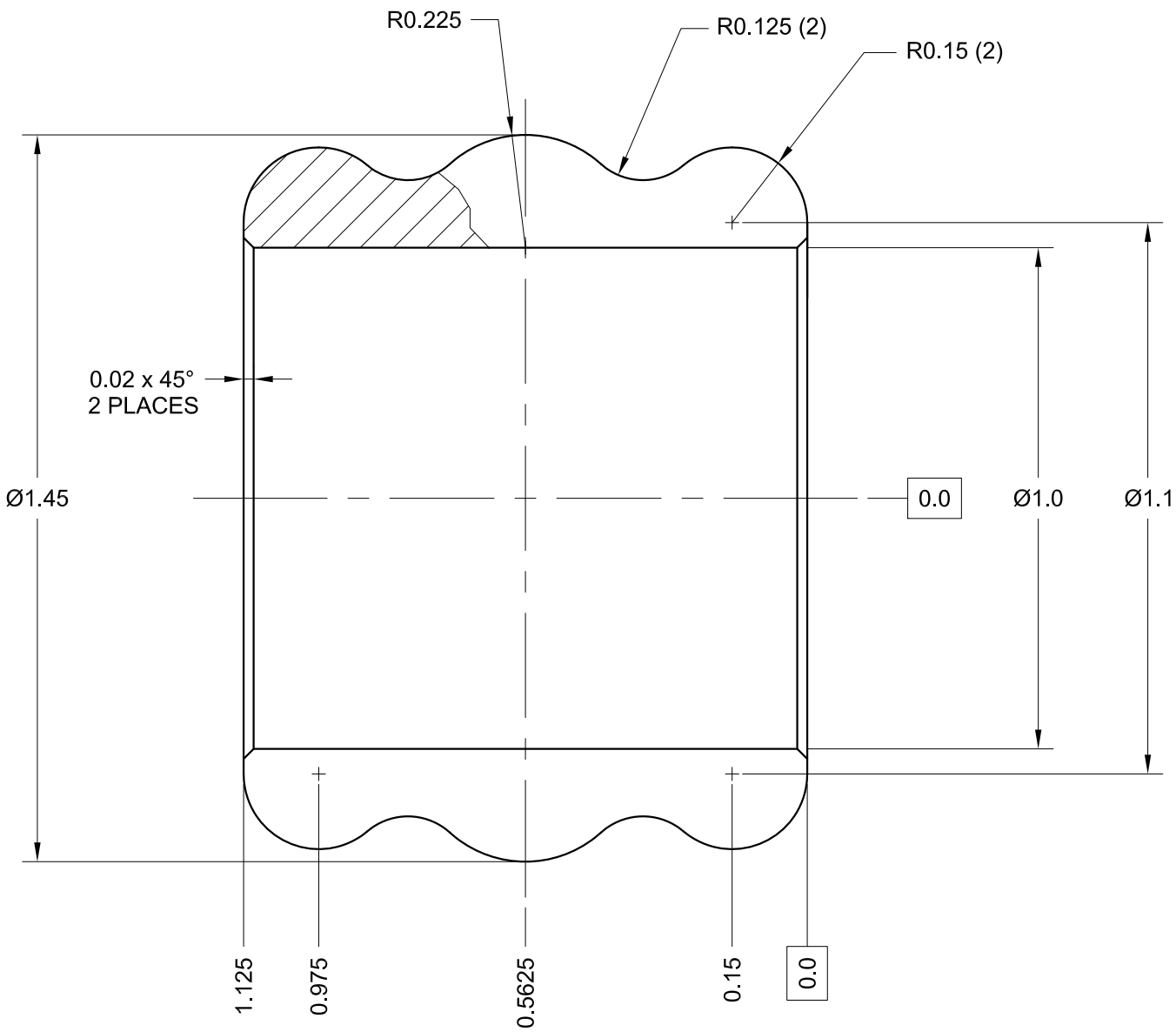

Peter Smid	CAD/CAM Lathe	Napkin holder - design 1 Ø1.5 BRASS BAR	3 : 1 NAPKIN HOLDER 1