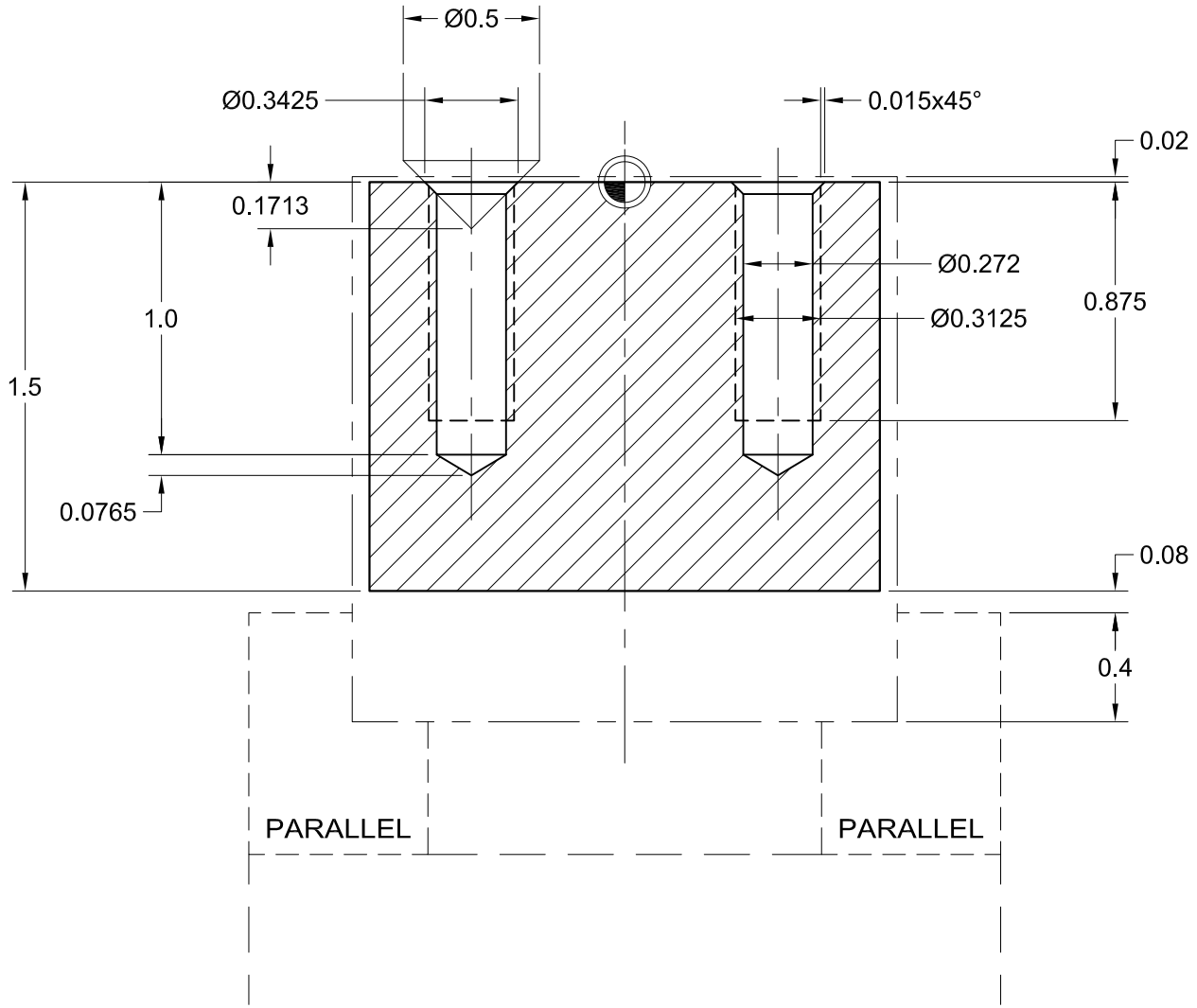

Peter Smid	CAD/CAM 2D	Z toolpath	1.5 : 1 PUNCH INSERT - Z TOOLPATH