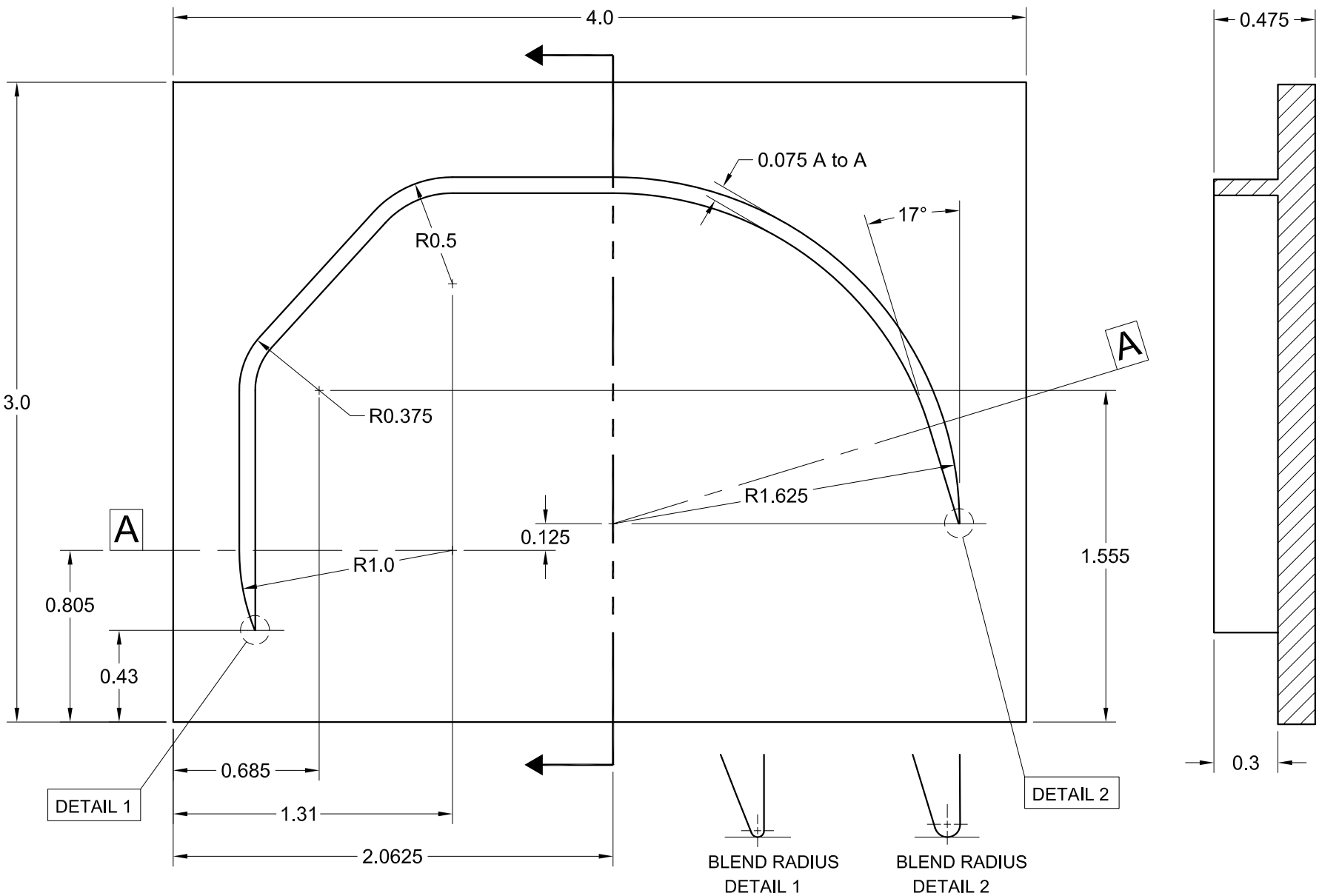

Peter Smid	CAD/CAM 2D	Example of programming and machining hard material MATERIAL: O1 - HARDNESS: 50Rc	1.5 : 1 CUTTING DIE