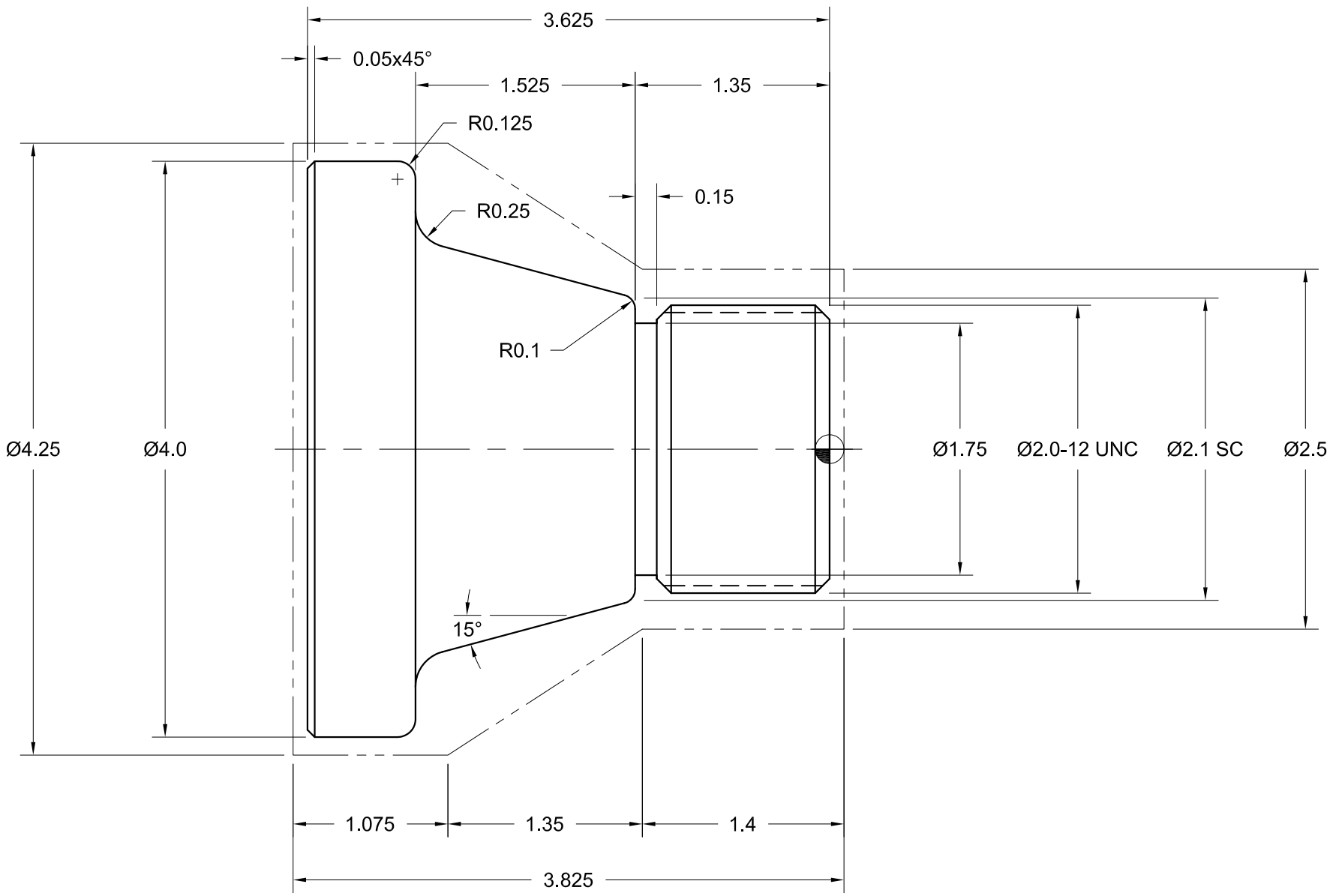

Peter Smid	CAD/CAM Lathe	CNC lathe programming exercise Material removal of irregular stock	1 : 1 TURNING AND THREADING